- Installation and wiring of luminaire must be in accordance with all applicable local codes.
- Installation, inspection, and maintenance of luminaires should be performed by a qualified electrician.
- DO NOT make or alter any open holes in the luminaire. Do not modify the luminaire.
- DO NOT install damaged product.
- Make sure electrical power is OFF before and during installation and maintenance.
- Make sure the equipment is properly grounded.
- Make sure the supply voltage is same as the rated fixture voltage.

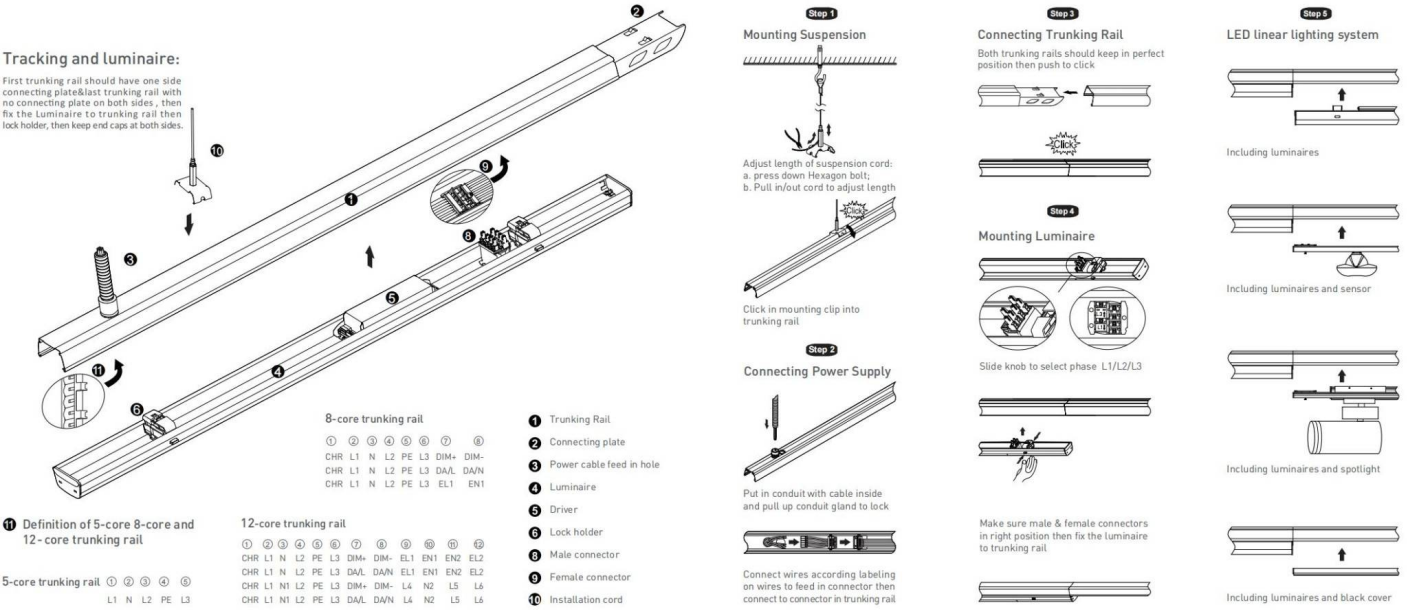

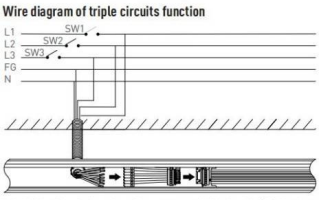

This Triple Circuits function offers to control lighting ON/OFF by three switches SW1,SW2,SW3 which are connected by live lines L1,L2,L3

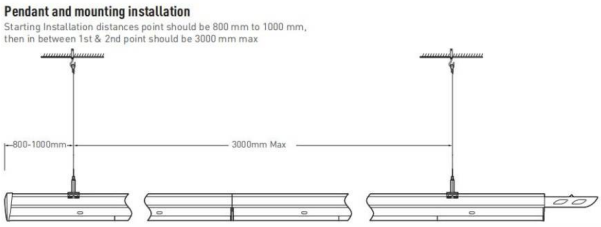

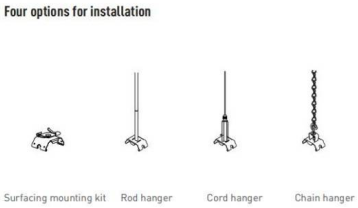

Safety notes:

Installation should be performed only by qualified electrician .

- Make sure no voltage while installation .
- Connect cable wires according to wire labeling.
- Max current should not exceed 16A in one power feed in circuit.

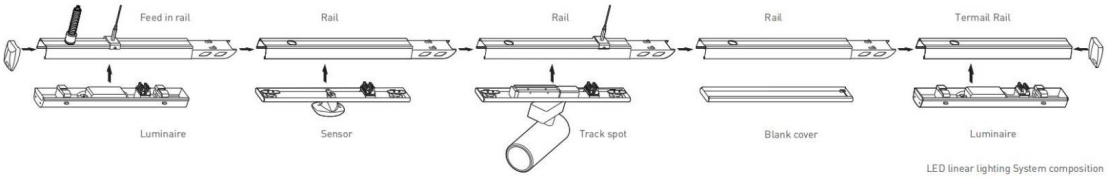

LED linear lighting System composition

Terminal module:

Terminal module can be independently installed as a single unit, it also can be connected at end of one linear light row.

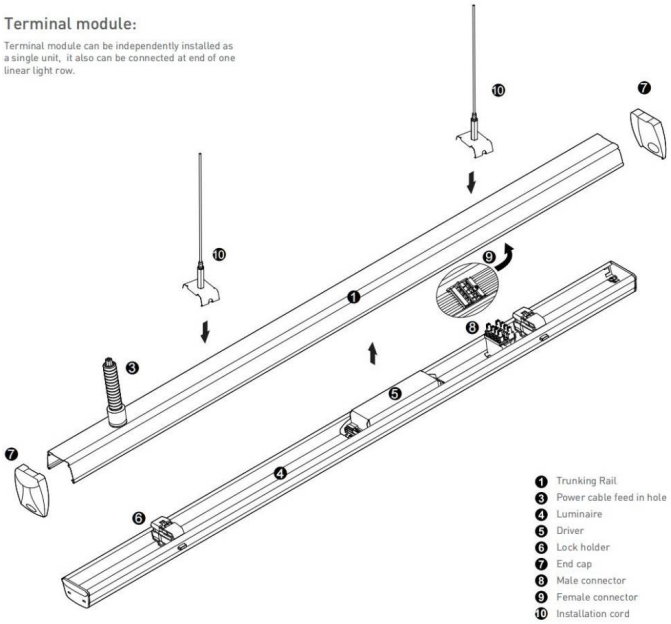

1. Trunking Rail
3. Power cable feed in hole
4. Luminaire
5. Driver
6. Lock holder
7. End cap
8. Male connector
9. Female connector
10. Installation cord

Step 1

Mounting Suspension

Drill a hole on ceiling

Fix mounting hook into ceiling

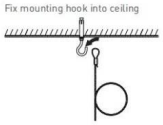

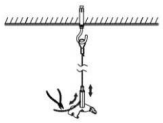

Adjust length of suspension cord:
a. press down Hexagon bolt;
b. Pull in/out cord to adjust length

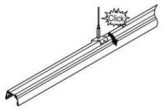

Click in mounting clip into trunking rail

Step 2

Connecting Power Supply

Cut the Rubber cap to pass the power cable

Screw in the conduit gland

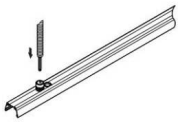

Put in conduit with cable inside and pull up conduit gland to lock

Connect wires according labeling on wires to feed in connector then connect to connector in trunking rail

Step 3

Mounting Luminaire

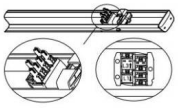

Slide knob to select phase L1/L2/L3

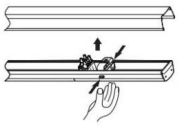

Make sure male & female connectors in right position then fix the luminaire to trunking rail

Push the sliding lock to lock the luminaire to trunking rail